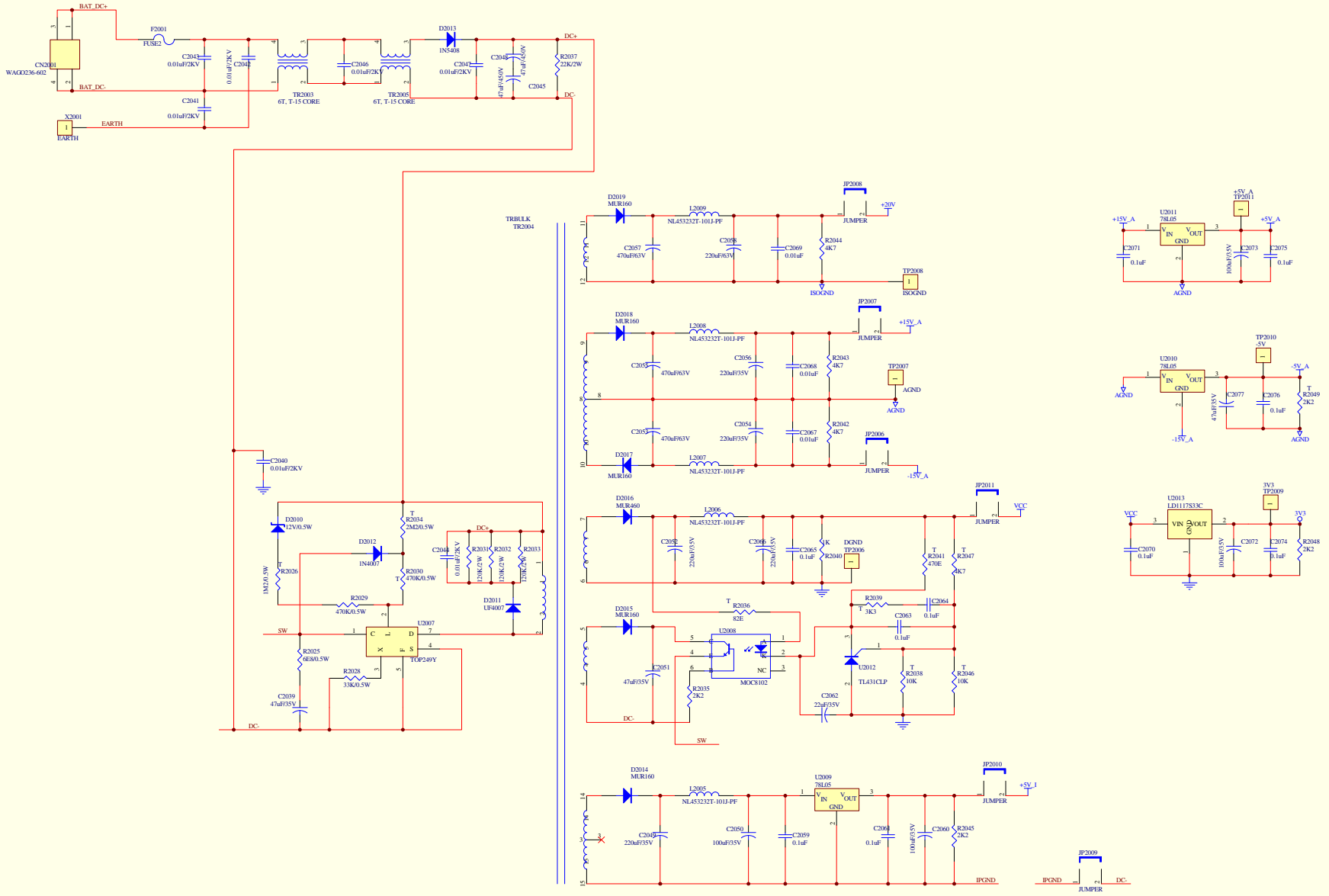

Title		
Size: A2	Number	Revision
Date: 7-May-2016	Sheet of	
File: C:\Users\Prosun Chakraborty\Downloads\BRAINS_SplitR_04.11.2015.Ddb		