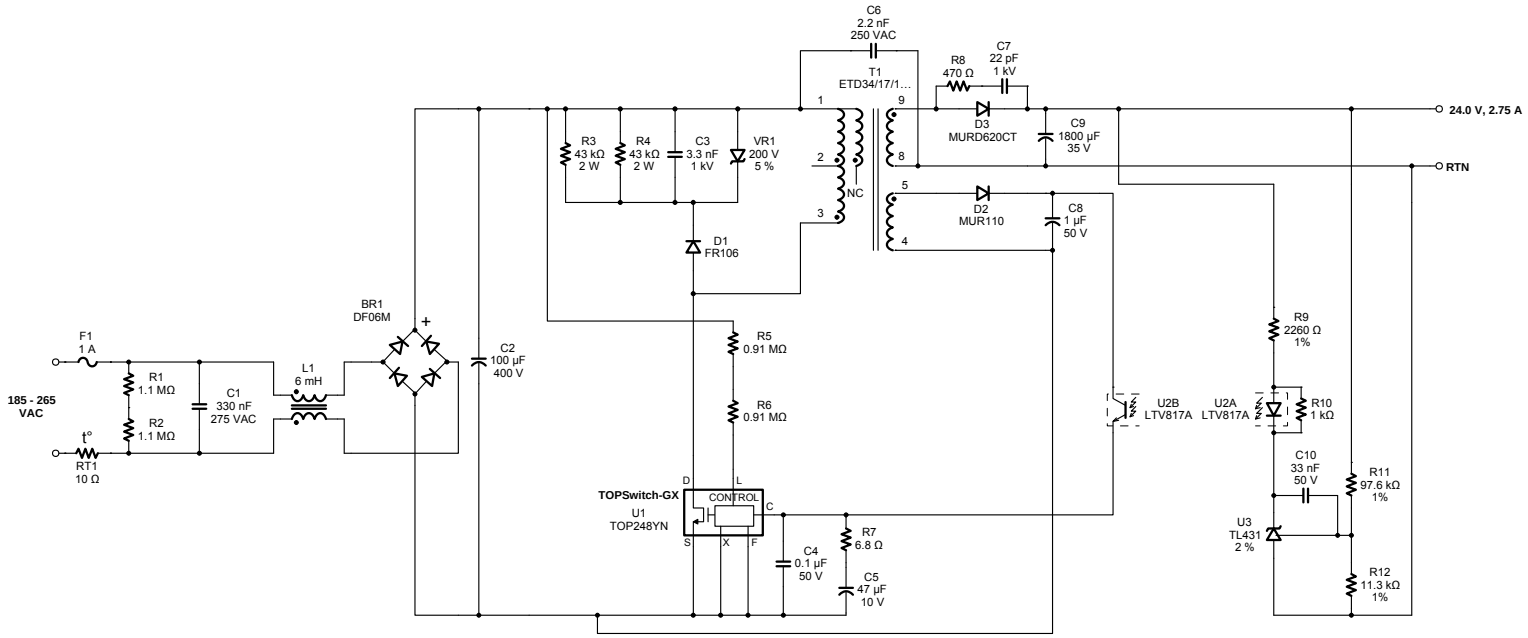
C6
2.2 nF
250 VAC
T1
ETD34/17/1...
R8
470 Ω
C7
22 pF
1 kV
D3
MURD620CT
C9
1800 µF
35 V
24.0 V, 2.75 A
RTN
R3
43 kΩ
2 W
R4
43 kΩ
2 W
C3
3.3 nF
1 kV
VR1
200 V
5 %
NC
D2
MUR110
C8
1 µF
50 V
D1
FR106
BR1
DF06M
F1
1 A
185 - 265
VAC
R1
1.1 MΩ
R2
1.1 MΩ
C1
330 nF
275 VAC
L1
6 mH
C2
100 µF
400 V
RT1
10 Ω
R5
0.91 MΩ
R6
0.91 MΩ
TOPSwitch-GX
U1
TOP248YN
CONTROL
D
L
C
S
X
F
C4
0.1 µF
50 V
R7
6.8 Ω
C5
47 µF
10 V
U2B
LTV817A
U2A
LTV817A
R9
2260 Ω
1%
R10
1 kΩ
C10
33 nF
50 V
R11
97.6 kΩ
1%
U3
TL431
2 %
R12
11.3 kΩ
1%