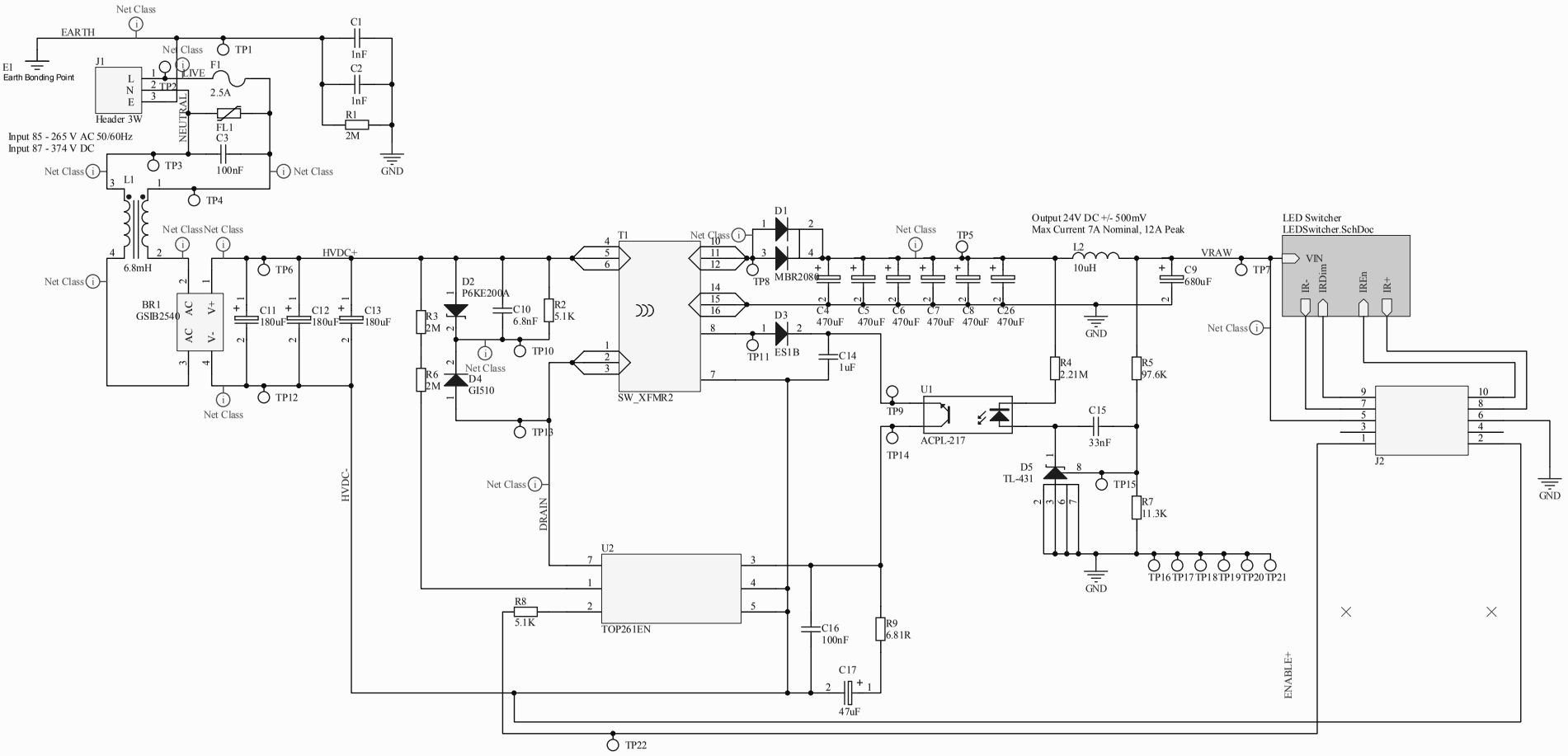

BOSCH

Copyright © Bosch Security Systems LTD

This drawing is the property of Bosch Security Systems LTD. It should not be copied, reproduced or disclosed to any third party without the written permission from Bosch Security Systems LTD.

ECN	CHANGE	DATE

TITLE: Mains Switch Mode PSU

NAME	Mains Switcher	SHEET * OF 2	
DWG No. *	CCR (Y52)	ISSUE *	
SAP No.	SAPNumberPCBA		
FILENAME	715-001-01.SchDoc	LAST MOD	05/01/2010

DRAWN BY	Dave Westwood	DATE	DrawnDate
CHECKED BY	*	DATE	CheckedDate
APPVD BY	*	DATE	ApprovedDate