Auxiliary Power Supply

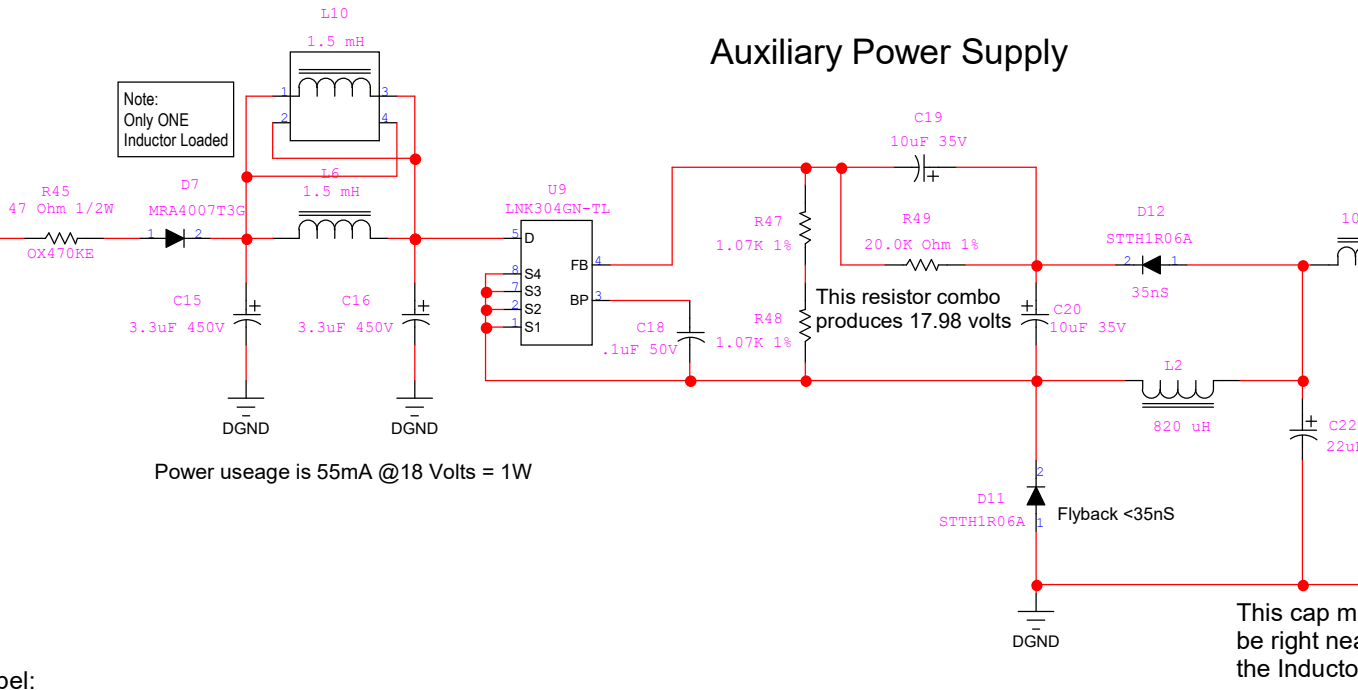

Power useage is 55mA @18 Volts = 1W

bel:
og. Pwr