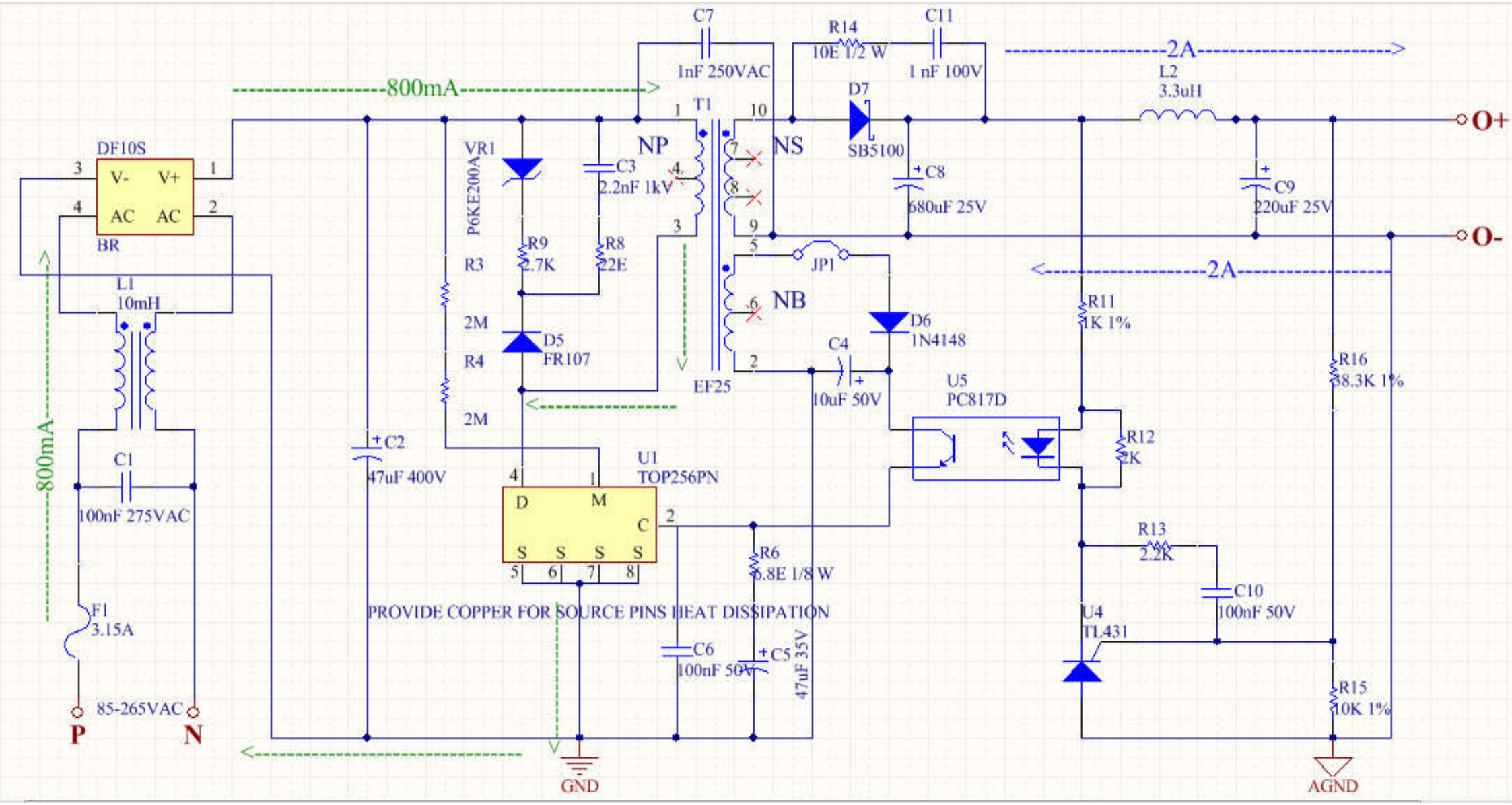
C7
1nF 250VAC
R14
10E 1/2 W
C11
1 nF 100V
2A
L2
3.3uH
O+
O-
800mA
DF10S
V-
V+
AC
AC
BR
VR1
P6KE200A
C3
2.2nF 1kV
NP
T1
NS
D7
SB5100
C8
680uF 25V
C9
220uF 25V
R9
2.7K
R8
22E
R3
2M
R4
2M
D5
FR107
JP1
NB
D6
1N4148
C4
10uF 50V
EF25
L1
10mH
C1
100nF 275VAC
F1
3.15A
85-265VAC
P
N
C2
47uF 400V
U1
TOP256PN
D
M
C
S
S
S
S
R6
6.8E 1/8 W
PROVIDE COPPER FOR SOURCE PINS HEAT DISSIPATION
C6
100nF 50V
C5
47uF 35V
GND
U5
PC817D
R11
1K 1%
R12
2K
R13
2.2K
C10
100nF 50V
U4
TL431
R16
38.3K 1%
R15
10K 1%
AGND