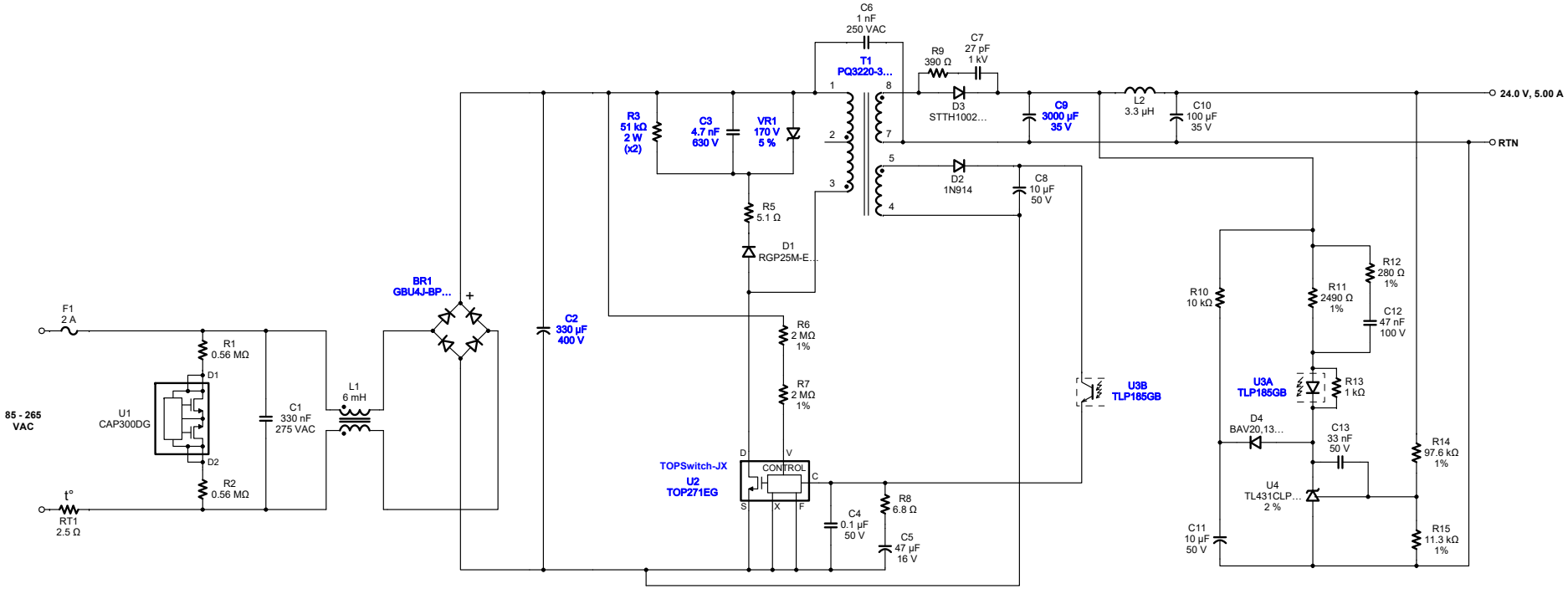

Schematic components that have been frozen by the user will appear with blue reference designators.